SAFETY STRAPS

APPLICATION GUIDELINES

- Secures mold parting lines for transportation, mold setting, and storage.
- Breakaway feature in center of the Safety Strap is engineered to break slightly before the bolts would shear.
- If unintentionally left on the mold in the press, the Safety Strap will be obvious to the operator that it is broken and can easily be replaced. Other straps shear the bolts, which cannot be removed with the mold in the press, creating an unsafe condition when the mold is later removed from the machine.
- Progressive Safety Straps can replace others' mold straps.
- Strength Ratings have a safety factor of two.
- Powder coated OSHA yellow.

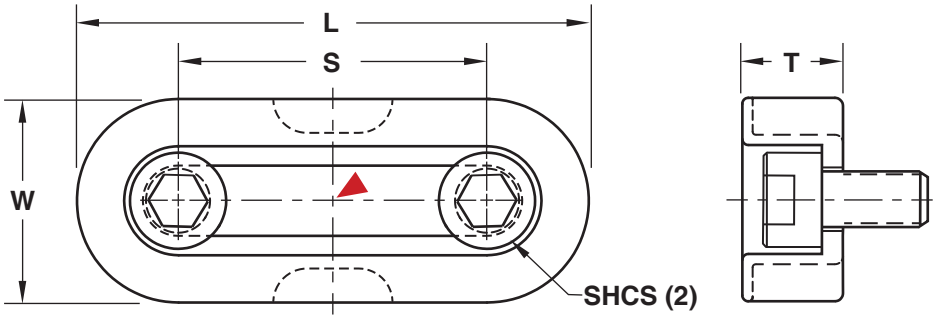

Inch Standard

M 1010 **H** 85 Brinell

CAD insertion point

CATALOG NUMBER	L	W	T	S	SHCS	STRENGTH RATING (LBS)
SAFT-88	1.62	.75	.37	.88	1/4-20 x 1/2	1,000
SAFT-150	2.50	1.00	.50	1.50	5/16-18 x 5/8	1,500
SAFT-200	3.37	1.37	.75	2.00	1/2-13 x 1	3,000

Holo-Krome® screws included.

Metric Standard

CATALOG NUMBER	L	W	T	S	SHCS	STRENGTH RATING (KG)
SAFTM-22	42	20	10	22	M6-1.0 x 12	450
SAFTM-38	64	26	14	38	M8-1.25 x 16	680
SAFTM-50	86	35	20	50	M12-1.75 x 25	1360

Holo-Krome® screws included.

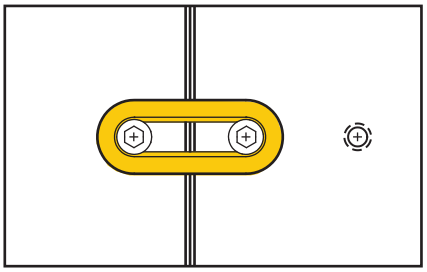

Surface Mount

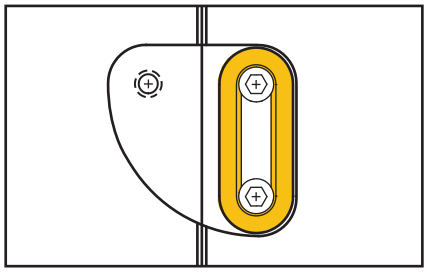

Swing Mount

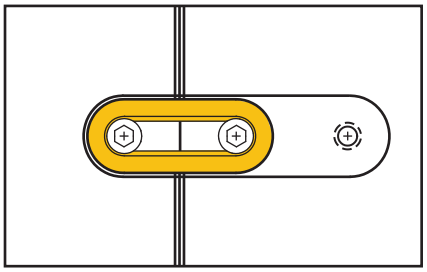

Sliding Mount

MOLD WEIGHTS	STRAP PART NUMBER
UNDER 1,000 LBS / 450 KG	SAFT-88 / SAFTM-22
UNDER 1,500 LBS / 680 KG	SAFT-150 / SAFTM-38
UNDER 3,000 LBS / 1360 KG	SAFT-200 / SAFTM-50

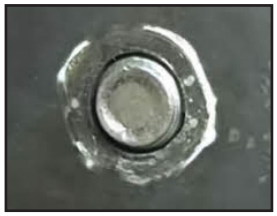

Unlike other mold straps, Progressive's Safety Straps have an engineered break point to avoid bolt shearing when left on the tool in the press.

PROGRESSIVE COMPONENTS

Patents pending.